General set up

1 Mount the fixture in the required position using the supplied combi yoke or optional floor plate set (p/n: SSFLP).

Important

- When suspended off ground, always use safety wires rated to a minimum of 53kg (117lbs) at both ends of the fixture through the safety wire holes.
- Do not position the fixture close to fog machines. The fog oil mist will be drawn in by the cooling fans and will short out important components. The warranty will be void for all fixtures returned in such a condition.

2 Connect the power in and DMX in connectors at the left end of the fixture.

3 Where multiple fixtures are to be daisy-chained, connect power out and DMX cables at the right end of the fixture.

Important

- When daisy-chaining fixtures, do not exceed a total load of 3kW in a single daisy chain (subject to supply and cabling restrictions). Each PixelLine 110 fixture has a maximum power requirement of 300 watts.

4 When all fixtures are connected, apply power.

5 Use the control panel to access the internal menu and choose the appropriate operation mode and related settings (see over).

- To optionally clear all previous settings: At the rear panel, press the middle two buttons (⬅ and ⬇) while the DMX address is displayed (e.g. A001, A002, etc). The four digit display will show FACT then SET to indicate that the fixture has been returned to its default condition.

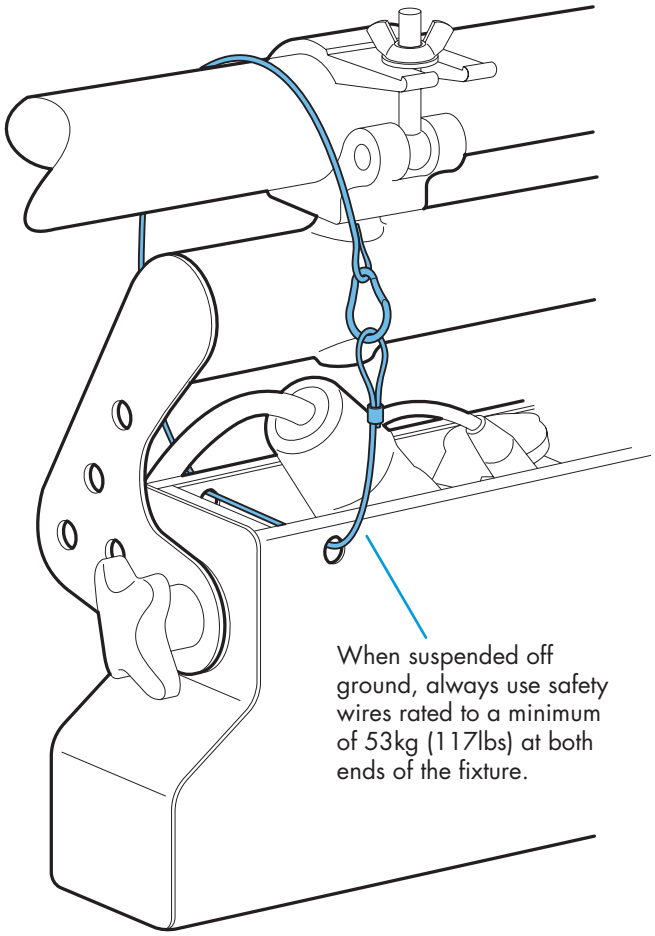

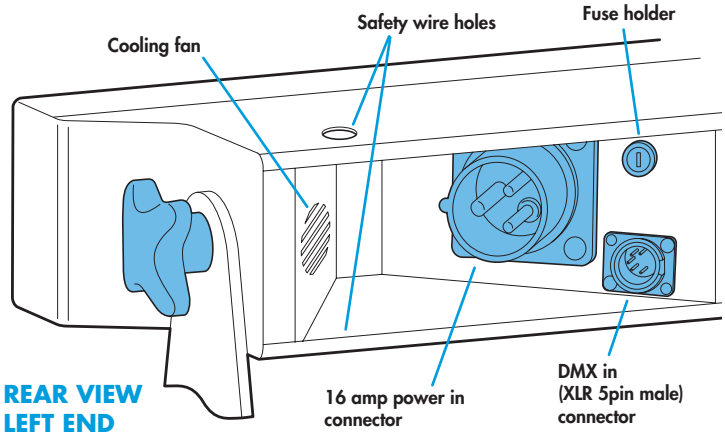

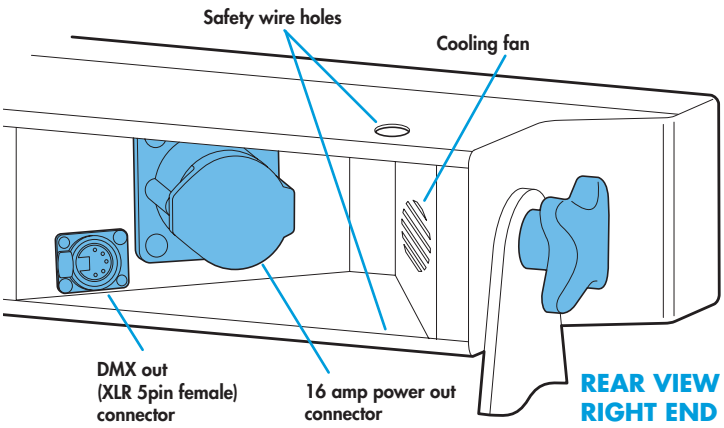

Operation modes

The PixelLine 110 provides a range of operation modes. These are selected using the ModE section of the control menu:

dMX Allows RGBA control of all cells via DMX input. Using the RES (resolution) option you can determine the number of DMX channels required, from 20 channels down to just 3 (the cell sizes and colour permutations are adjusted accordingly). Internal chase effects are not available within this mode.

MANU Provides RGBA colour mixing independently of any external control. Use the internal control menu (MAN section) to select the required colour values.

EF M Allows the display of the dual internal chase effects, independently of any external control. Use the internal control menu (PRoG section) to select the required chase effects, speeds and cross fades.

20+E Provides control of RGBA mixing on all 5 cells and selection of the dual internal chase effects via DMX input. Requires 27 DMX channels.

4+E Provides control of RGBA mixing (the whole fixture acts as a single cell) and selection of the dual internal chase effects via DMX input. Requires 11 DMX channels.

PixelLine 110 personalities are available for a variety of controllers. Please see **www.pixelrange.co.uk** for details.

General notes

- Ensure that only one DMX device in the chain is set as master (e.g. the lighting desk). The fixture is usually set to slave mode slave
- The fixture is shipped with the DMX address set to 001.
- If the fixture is used as a master, DMX transmission will only occur when the DMX address is displayed (e.g. A001, A002, etc).
- The four digit display can be set to fade out after 60 seconds, press ☰ to resume. To alter this mode: PERS > dISP.

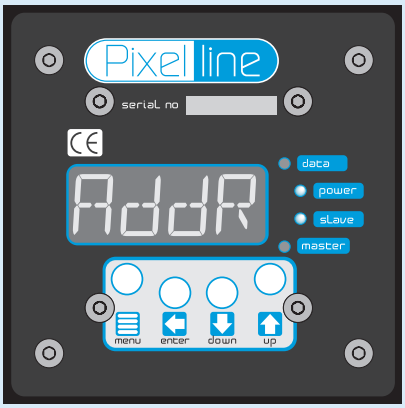

Using the control menu

- When not in the menu, the four digit display shows the current DMX address e.g. A001
- Press ☰ to enter the menu. The four digit display will show AddR.
- Use ⬇ and ⬆ to move between menu options (or to change a value within an option).
- Press ⬅ to enter an option (or to fix a changed value within an option and return to the previous option level). *Note: If you do not press ⬅ to fix a value, operation will revert to the previously set mode at the next power on.*
- Press ☰ to exit from a menu option (and eventually exit the menu completely).

Chase effects

This section describes each of the 31 internal chase effects that are selectable either via the control menu (PROG > C1/C2 > EFEC) or using DMX values sent from an external source. To use the internal effects, set the ModE option either to EF M (to control effects via the menu) or 4+E or 20+E (to control effects externally via DMX).

DMX value	EFEC value	Chase effect description
0-7	00	Off
8-15	01	Rainbow chase forward
16-23	02	Rainbow chase reverse
24-31	03	White single cell chase forward
32-39	04	White single cell chase reverse
40-47	05	Double bouncing cells - centre to edge
48-55	06	50/50 duty cycle strobe white
56-63	07	50/50 duty cycle strobe red
64-71	08	50/50 duty cycle strobe blue
72-79	09	50/50 duty cycle strobe yellow
80-87	10	50/50 duty cycle strobe green
88-95	11	Pulse strobe white
96-103	12	Pulse strobe blue
104-111	13	Pulse strobe rainbow
112-119	14	Pulse strobe red/green/blue
120-127	15	Primary/secondary chase
128-135	16	Rainbow chase
136-143	17	Yellow/blue chase
144-151	18	Red/green/blue wipe
152-159	19	Yellow/blue alternate cell chase
160-167	20	Red/blue alternate cell chase
168-175	21	Red/green chase
176-183	22	Red wipe
184-191	23	Green wipe
192-199	24	Blue wipe
200-207	25	Static orange
208-215	26	Static yellow
216-223	27	Static light blue
224-231	28	Static purple
232-239	29	Static red
240-247	30	Static green
248-255	31	Static blue

DMX channel and cell layouts

This section shows the different ways, when using dMX mode, that the 5 cells can be mapped to varying numbers of DMX channels using the PERS > RES option.

The first channel of the fixture occurs at the DMX address selected using AddR and successive channels for the fixture follow from there.

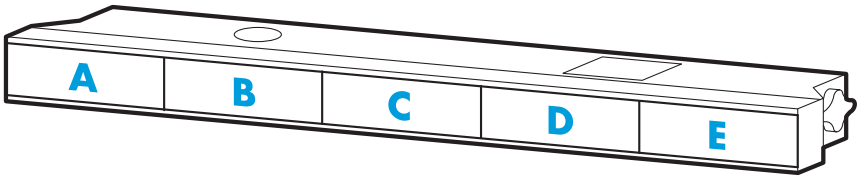

Cells	PERS>RES= 20CH				PERS>RES= 15CH			PERS>RES= 4CH				PERS>RES= 3CH		
	R	G	B	A	R+A	G	B	R	G	B	A	R+A	G	B
A	1	2	3	4	1	2	3							
B	5	6	7	8	4	5	6							
C	9	10	11	12	7	8	9	1	2	3	4	1	2	3
D	13	14	15	16	10	11	12							
E	17	18	19	20	13	14	15							
Master intensity*	21				16			5				4		

(* Mode dMX only, when PERS > MINT is set to ON)

Mode 20+E uses the same RGBA mapping as the 20CH layout and mode 4+E uses the same RGBA mapping as the 4CH layout, however, the master intensity channels for these modes are different. The 20+E and 4+E modes also use additional channels for control of internal chase effects (see below).

Chase effects and master intensity channel layouts

The table below shows how the chase effects and master intensity controls are mapped to DMX channels for the 20+E and 4+E modes. Mode dMX does not use chase effects. The first channel of the fixture occurs at the DMX address selected using AddR and successive channels for the fixture follow from there.

Control	20+E	4+E
C1 Effect	Ch21	Ch5
C1 Speed	Ch22	Ch6
C1 Xfade	Ch23	Ch7
C2 Effect	Ch24	Ch8
C2 Speed	Ch25	Ch9
C2 Xfade	Ch26	Ch10
Master intensity	Ch27	Ch11

Control menu contents

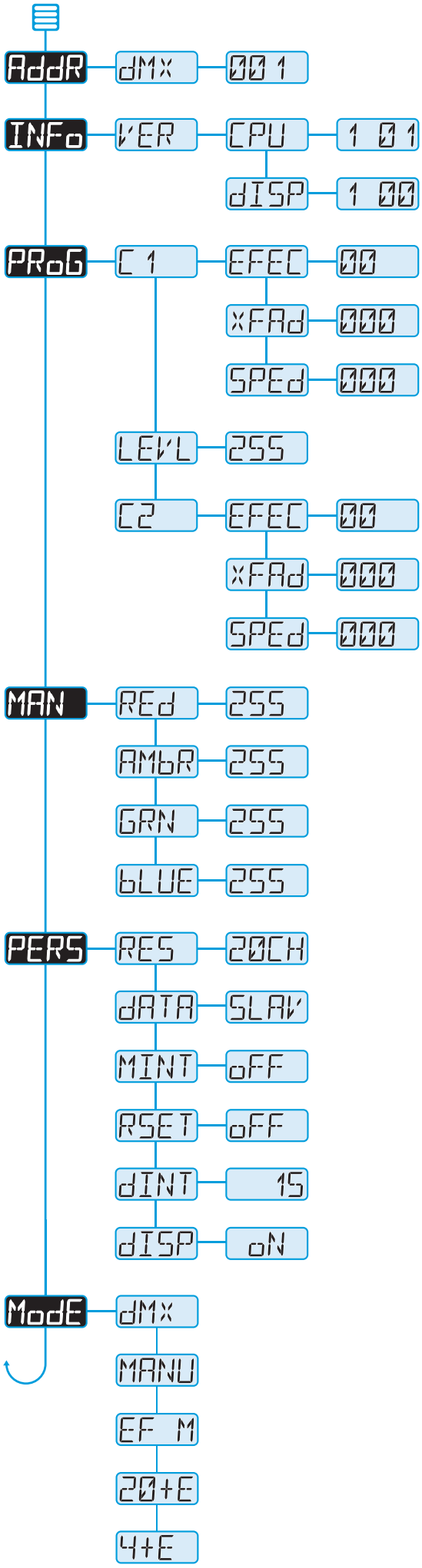

Sets the base DMX address from which the control channels will begin.

Shows the main processor software revision. No changes are possible within this option.

Shows the display controller software revision. No changes are possible within this option.

Selects the primary internal chase effect. See *Chase effects* for descriptions. Select ModE > EF M to show the selected chase.

Selects the cross fade speed between the steps of the selected C 1 chase effect.

Selects the speed of the selected C 1 chase effect.

Selects the master intensity level of chase effects C 1 and C2.

Selects the secondary internal chase effect. See *Chase effects* for descriptions. Select ModE > EF M to show the selected chase.

Selects the cross fade speed between the steps of the selected C2 chase effect.

Selects the speed of the selected C2 chase effect.

Sets the red intensity for all cells. Select ModE > MANU (manual) to show the result.

Sets the amber intensity for all cells. Select ModE > MANU (manual) to show the result.

Sets the green intensity for all cells. Select ModE > MANU (manual) to show the result.

Sets the blue intensity for all cells. Select ModE > MANU (manual) to show the result.

dMX mode only. Selects number of DMX channels required to control RGB in all cells. Options range from 20 through 15, 4 and 3. Cell sizes & colours are adjusted to suit.

Determines whether this fixture will act as a master controlling others. When controlled via DMX this fixture must be set to SLAV.

dMX mode only. When set oN, this enables a master intensity at the channel that immediately follows the number set within the PERS > RES option.

When set oN, this option scrolls through the primary colours at power on to demonstrate correct operation.

Determines the intensity of the four digit control panel display and blue status indicators. Values range from 0 (dimmest) to 15 (brightest).

When set to AoFF, the control panel display will blank out 60 seconds after the menu is exited. The blue status indicators will remain active.

RGBA control for cells using variable DMX channels determined by PERS > RES setting. MINT set oN provides master intensity. No chase effects are selectable.

Displays the resulting RGBA levels (of all cells combined) that are set via the MAN section of the internal menu. External DMX control is not possible in this mode.

Displays the chase effect(s) determined within the PRoG section. External DMX control is not possible in this mode.

DMX Ch1 to 20: RGBA for indiv. cells, Ch21 to 23: C1 Effect, Speed & Xfade, Ch24 to 26: C2 Effect, Speed & Xfade, Ch27: Master intensity.

DMX Ch1 to 4: RGBA for all cells, Ch5 to 7: C1 Effect, Speed & Xfade, Ch8 to 10: C2 Effect, Speed & Xfade, Ch11: Master intensity.

Troubleshooting

Fixture remains at blackout when illumination expected

- The power indicator should be lit - if not, check the input power and fuse (see below).
- If live DMX is connected, the data indicator should be lit - if not, check the DMX cable and the desk output.
- Check that the selected ModE matches the desk personality being used.
- The master intensity channel for the current mode may be set at zero. For dMX mode, check the setting of PERS > MINT.
- Ensure that only one DMX device in the chain is set as master.
- Standalone chase effects: Effects programmed using PRoG > C 1 and C2 but the fixture is not in ModE > EF M mode. Check also that PRoG > LEVL is not set at zero.
- Standalone RGB mixing: Colour values set within MAN section but the fixture is not in ModE > MANU mode.

Unexpected cell illumination occurring

- When using dMX mode: Check the setting of PERS > RES. See the section "DMX channel and cell layouts" on page 2 for an explanation of the various resolution modes.

Fuse access

The single fuse is located next to the power and DMX input connectors. Use a small flat blade screw driver to twist the fuse holder anticlockwise until the carrier can be extracted to reveal the fuse.

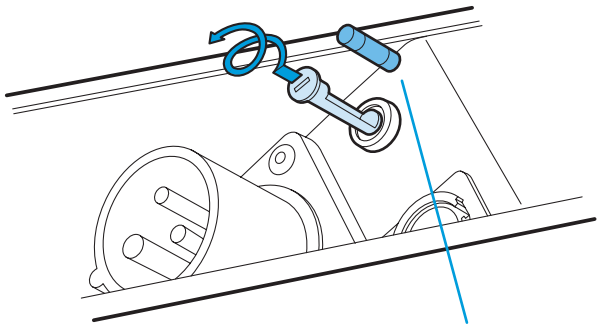

Fuse type: 20mm 4A (T4AH) anti-surge, ceramic body

Specifications

Dimensions

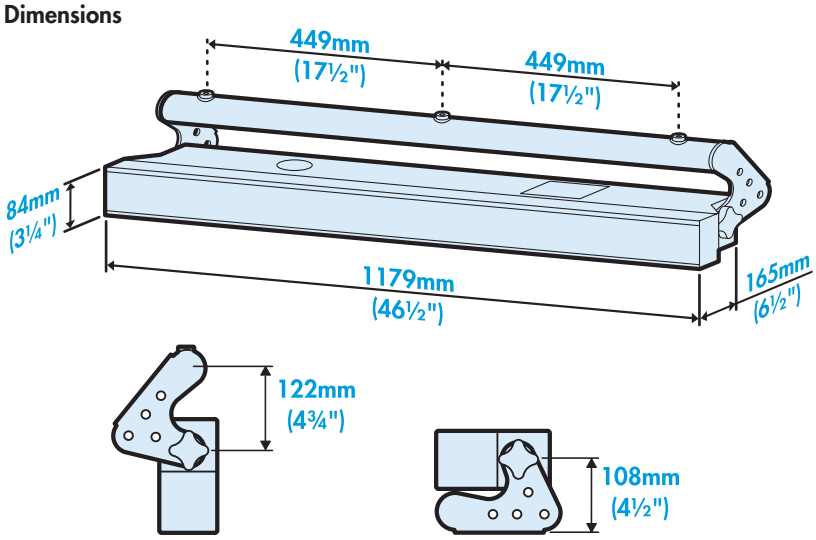

Weight

Fixture alone:	10.5kg (23 lbs)
With combi yoke:	11.7kg (25.8 lbs)

Power

Input voltage:	100 to 250V AC, 50 to 60Hz autosensing	
Connectors:	16 amp CEE Form 2Pole+Earth (input & output)	
Power requirements:	*@ 230V/50Hz*	*@ 120V/60Hz*
Standby	10 watts	10 watts
Maximum (const.)	300 watts	300 watts
Start up (peak)*	128 amps	64 amps

** The peak value occurs only at first power up and lasts only for a period measured in microseconds. Adjustments may need to be made to supply circuit breakers when multiple fixtures are daisy-chained, causing them all to draw the peak simultaneously.*

Approvals

CE

Miscellaneous

Enclosure rating:	IP20 (not protected against moisture ingress)
Control input:	USITT DMX512 (input connector pin out below)

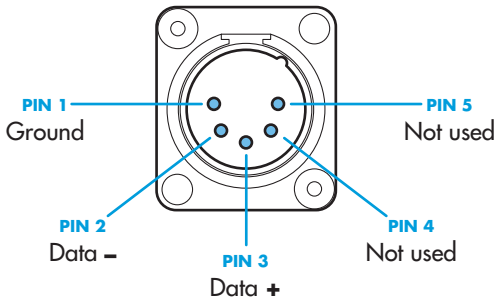

Documentation by **Corporate Text & Design** (www.ctxd.com)
Release 1.1e